SOP STANDARD

Date	STANDARD CYCLE
10/9/2020	I-20002

Machine	2021 WTAP People Mover	Subsystem	AB 842E-MIP4BA FTPCON EDON CONVEYOR ENCODER	Components	Encoder

SAFETY						ENV.		
Mark X if required				X				
Description				Safety glasses				

1

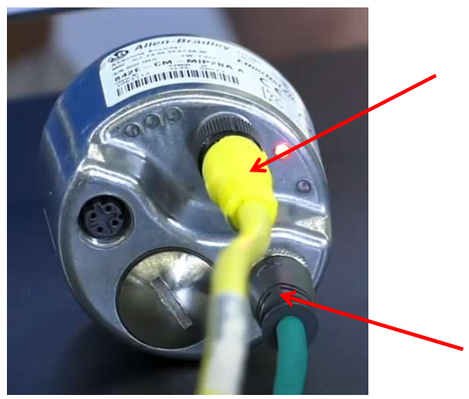

2

3

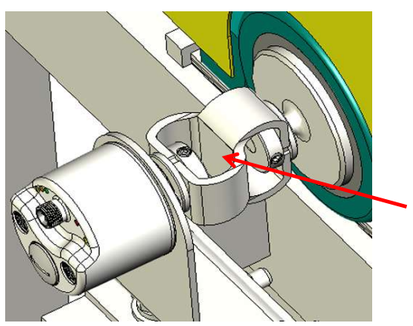

AM Cycle Classification	Cleaning		Lubrication	
	Inspection	X	Tightening	

Initial release or - Modification	Center / Line	Date	Version
Initial	FINL	Oct-20	1

Attention!!! Always follow safety rules

Activity title

Inspection of Allen Bradley 842E Encoder

#	Materials/ Equipment	Description of activity steps	Time (min.)	TAG if check is NOK
		Perform LOCK-OUT procedure.	0.5	
1		Inspect the thumbscrews on the cables and make sure that they are tight on the encoder.	0.5	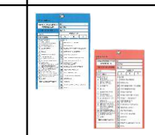
2		Verify that the screw cap is installed and tight on the back of the encoder.	0.5	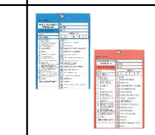
3		Touch the flexible coupling and shaft and verify it feels tight to the encoder.	1	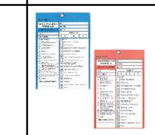

Frequency	Duration (min.)	Machine status			
Quarterly	2.5	X	Stopped		Running
Supplier info.					